Catalog Number	
Project Name	Type
Voltage	Lamps

23” TYPE-V FLOOD

INDUCTION

SPECIFICATIONS

- Die Cast Aluminum Housing
- Hinged Front Frame
- Safety Cable Restraint
- ½″ Coin Plugs with O-rings for Conduit & Photocell
- Textured Architectural Bronze Powdercoat Finish Over a Chromate Conversion Coating
- Aluminum IES Type V Reflector
- Tempered Flat Clear Glass Lens
- Mount with Two-Piece Swivel Bracket, Adjustable Slipfitter, 6″ Extruded Mounting Arm, Yoke, or Direct Pole Mount Arm
- 120, 150, 200, 300W, 5000K Lamp
- CSA Listed for Wet Locations
- Custom Colors Available Upon Request

APPLICATIONS

- Parking lots
- Buildings
- General area lighting

100,000 Hour Rated Lamp Life

ORDERING GUIDE:

F23V - 200 - 277 - PC

Series	Lamp	Ballast	Options
☐ F23V - 23” Type V Flood	☐ 120W	☐ 120V	☐ AL90LG - Lexan Guard
	☐ 150W	☐ 240V	☐ AL90WG - Wireguard
	☐ 200W	☐ 277V	☐ CPSC - 3’ Safety Cable
	☐ 300W		☐ FL90BR - Two Piece Bracket
			☐ FL90GS - Glare Shield
			☐ FL90LY - Large Yoke
			☐ FL90SFX - External Mount Slipfitter
			☐ FLAM - Heavy Duty Adjustable Mounting Arm
			☐ FLEM6 - 6” Extruded Mounting Arm (Sq)
			☐ SDT - 480V Step Down Transformer
			☐ PC - Photocell

Catalog Number	
Project Name	Type
Voltage	Lamps

23” TYPE-V FLOOD

INDUCTION

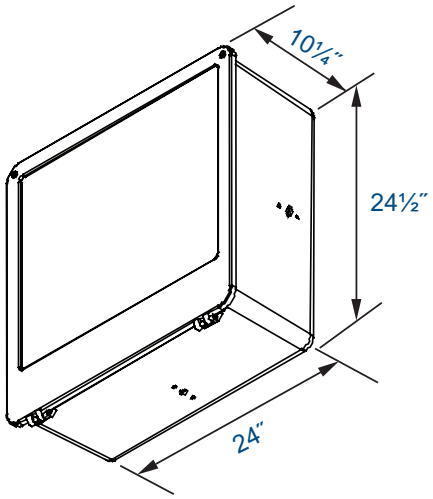

ACCESSORIES & MOUNTING OPTIONS

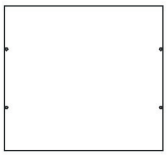

AL90LG

AL90WG
(Shown Mounted)

FL90GS

FLAM

FL90SFX

FL90BR

CPSC

FL90LY

FLEM6

F23V-200

Luminaire Properties

Number of Lamps:	1
Lumens Per Lamp:	18000
Input Watts:	210
Distribution:	Direct
Symmetry:	None
Photometric Type:	Type C
Luminous Shape:	Rectangle
Units:	Meters
Luminous Dimensions:	
0-180 Axis:	0.00
90-270 Axis:	0.50
Height:	0.00

Zonal Lumen Summary

Zone	Lumens	% Lamp	% Fixture
0-30	2999	17	27
0-40	5041	28	45
0-60	9201	51	81
0-90	11304	63	100
90-120	0	0	0
90-150	0	0	0
90-180	0	0	0
0-180	11304	63	100

Candela Plot

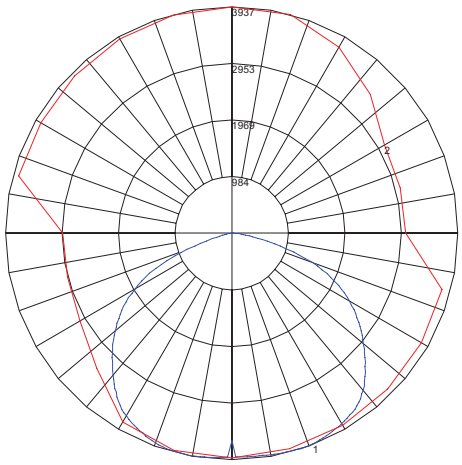

Maximum Candela = 3937.42 Located At Horizontal Angle = 75, Vertical Angle = 18
1 - Vertical Plane Through Horizontal Angles (75 - 255) (Through Max. Cd.)
2 - Horizontal Cone Through Vertical Angle (18) (Through Max. Cd.)

Coefficients of Utilization

pfc=	0.20																
pcc->		0.80				0.70				0.50			0.30			0.10	
pw->	0.70	0.50	0.30	0.10	0.70	0.50	0.30	0.10	0.50	0.30	0.10	0.50	0.30	0.10	0.00	0.00	0.00
RCR																	
0	75	75	75	75	73	73	73	73	70	70	70	67	67	67	64	64	64
1	69	66	63	61	67	65	62	60	62	60	58	59	58	57	54	54	54
2	63	58	53	50	61	56	53	49	54	51	48	52	49	47	45	45	45
3	57	51	46	42	56	50	45	41	48	44	40	46	43	40	38	38	38
4	52	45	39	35	51	44	39	35	42	38	34	41	37	34	32	32	32
5	48	40	34	30	47	39	34	30	38	33	30	37	32	29	28	28	28
6	44	36	30	26	43	35	30	26	34	29	26	33	29	25	24	24	24
7	41	32	27	23	40	32	27	23	31	26	23	30	26	22	21	21	21
8	38	29	24	20	37	29	24	20	28	23	20	27	23	20	19	19	19
9	35	27	22	18	35	27	22	18	26	21	18	25	21	18	17	17	17
10	33	25	20	16	32	24	20	16	24	19	16	23	19	16	15	15	15